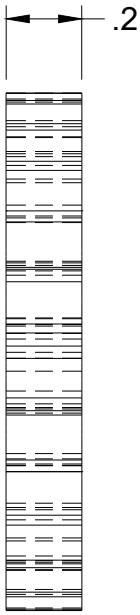

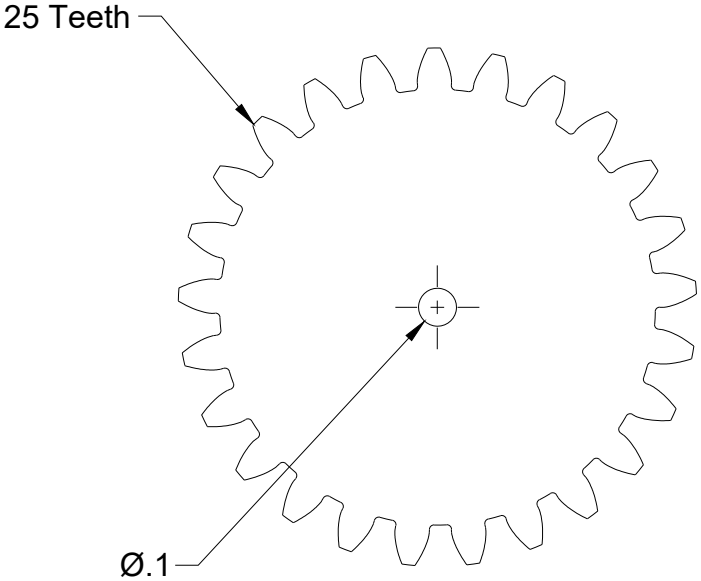

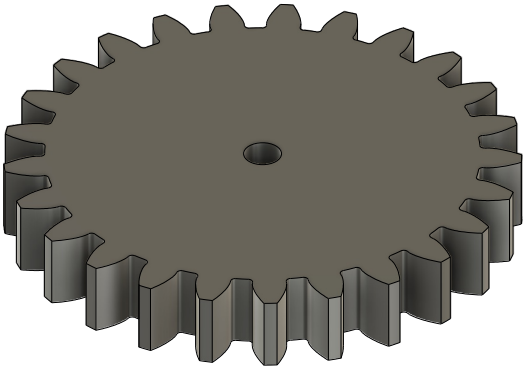

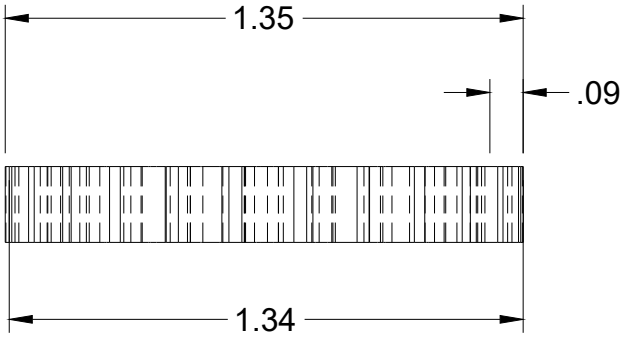

	PROJECT BAE305			
	TITLE Gear for servo			
APPROVED	SIZE	CODE	DWG NO	REV
CHECKED	A			
DRAWN Trevor Fryman 4/29/2026	SCALE 2:1	WEIGHT	SHEET 1/1	